Installation Instructions

Digilock WT-s Surface Mount for Metal Surfaces

Door Preparation: Before Installing Digilock you must prep your door by following these steps:

1. Remove lock mounting plate
2. Install your lock
3. Test the units operation

FIGURE 1

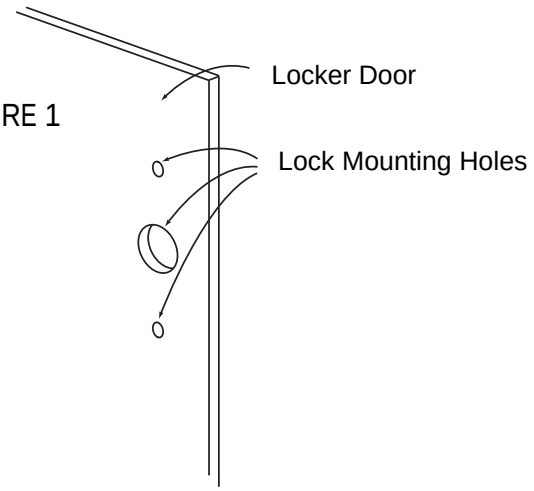

(1) Locate the three lock mounting holes on the locker door. Remove the hole blocking plate (if any) to expose the holes. (See Figure 1)

WARNING: Do not touch the rear unit connector against metal or other conductive surfaces. This may short the pin and cause damage to the lock. (See Figure 2)

FIGURE 2

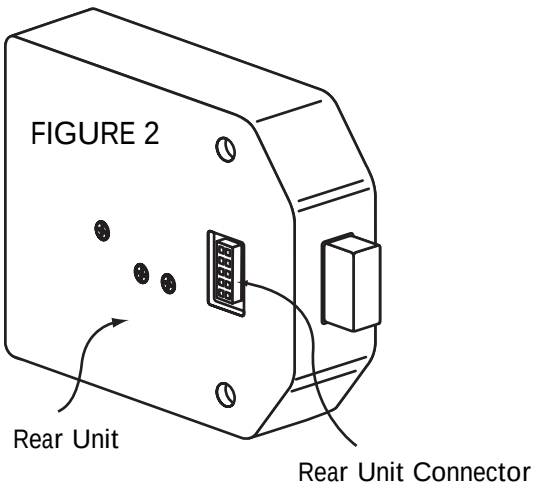

(2) Place the rear unit against the rear face of the door, aligning its mounting holes with the door. (See Figure 3)

Attach the lock washers to the mounting screws (10-24) then place the mounting screws through the mounting holes. At this point, you should be able to see the tips of the mounting screws from the front face of the locker door.

Place the front unit on the front face of the door connecting it with the rear unit. Make sure to align the pins of the rear unit connector with the extender of the front unit connector. An audible triple beep indicates that the lock was connected properly. If you do not hear this beep, reconnect the front and rear units. Tighten the mounting screws. (See Figure 3)

FIGURE 3

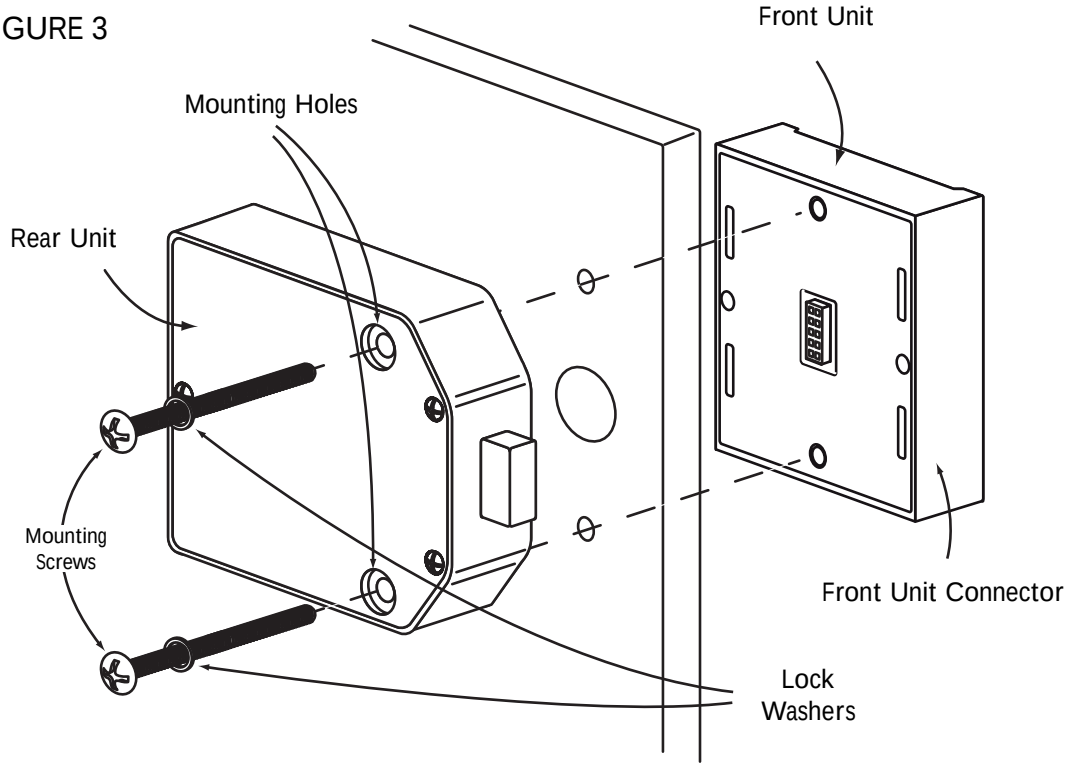

(3) Test the units operation several times while the door is open. Close the door and test the unit again. Make sure there is no binding between the latch and the door's strike plate and/or frame.